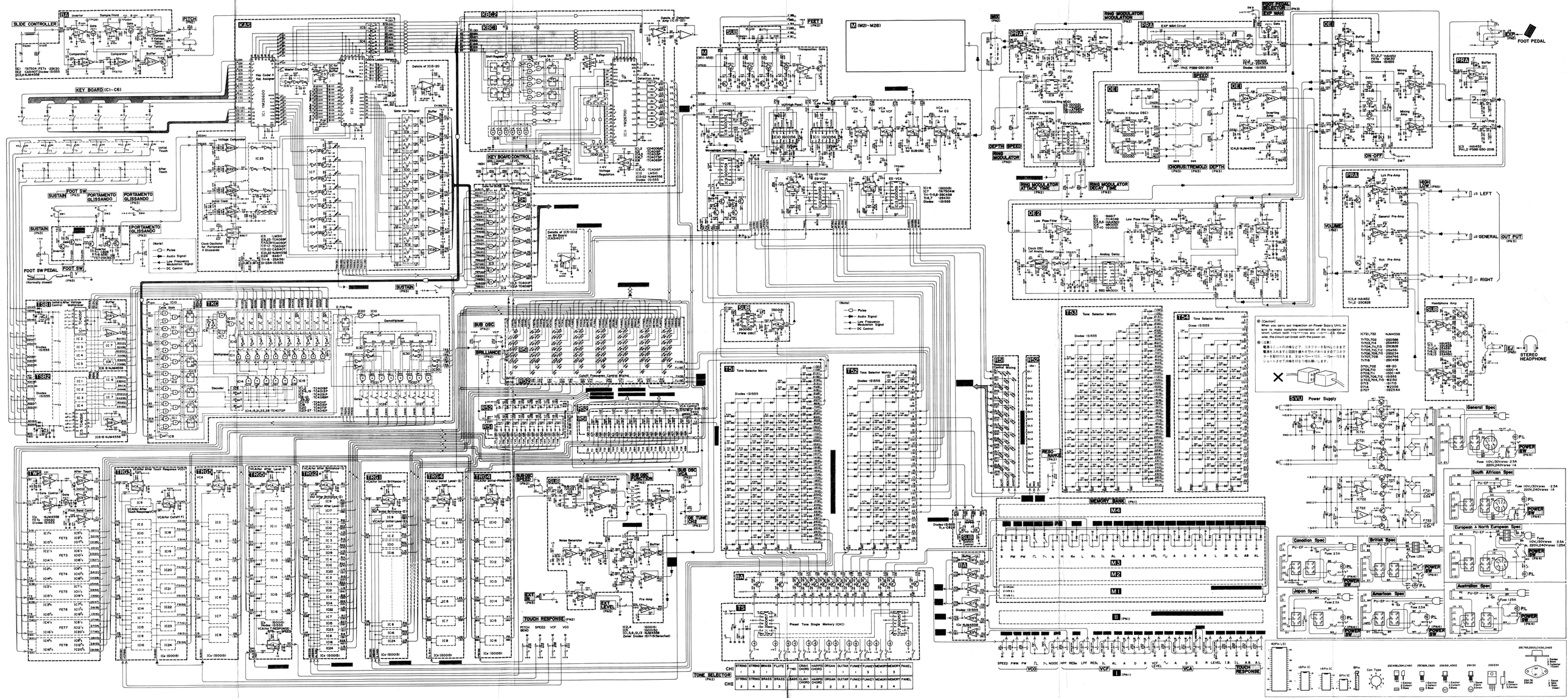
SLIDE CONTROLLER
PITCH
KEY BOARD (C1~C6)
KAS
KB2
KB1
KEY BOARD CONTROL
SUSTAIN
PORTAMENTO GLISSANDO
FOOT SW
FOOT SW PEDAL
(Normally closed)
TSS1
TSP2
TKC
SUB OSC (PN2)
BRILLIANCE (PN2)
SUB OSC SPEED (PN2)
SUB OSC FUNCTION (PN2)
SUB OSC TUNE CHK (PN2)
EXT IN (PN2)
EXT LEVEL (PN2)
TOUCH RESPONSE (PN2)
PITCH BEND
SPEED
VCF
VCO
TONE SELECTOR (PN2)
CH1
CH2
STRING
BRASS
FLUTE
E. PIANO
CRAVI CHORD
HARPSI CHORD
ORGAN
GUITAR
FUNKY
MEMORY
PANEL
M (M21~M28)
SUB
FET I (PN2)
VCO(High Pass)
VCF(Low Pass)
VCA for VCF
VCA for EG
VCA for SUB-OSC
Envelope Corrector
ES-VCF
ES-VCA
MIX (PN2)
RING MODULATOR (PN2)
RING MODULATOR MODULATION (PN2)
RING MODULATOR AT TACK TIME (PN2)
RING MODULATOR DECAY TIME (PN2)
DEPTH
SPEED
EXP MBK Circuit
FOOT PEDAL SELECTOR (EXP WAH)
FOOT PEDAL
OE
CHORUS (TREMOLO) DEPTH (PN3)
ON-OFF (PN3)
OE2
Low Pass Filter
Analog Delay
BBD MN3001
PRA
Lch Pre-Amp
Rch Pre-Amp
General Pre-Amp
HIGH CUT (PN3)
VOLUME (PN3)
J3 LEFT
J2 GENERAL OUT PUT (PN5)
J1 RIGHT
SUB
Headphone Amp
J4 (PN5)
STEREO HEADPHONE
TS3 Tone Selector Matrix
TS4 Tone Selector Matrix
Diodes 1S1555
TS1 Tone Selector Matrix
TS2 Tone Selector Matrix
TS Preset Tone Single Memory (CH1)
SA
SB
SC
SD
SE
SF
SG
SH
SI
SJ
SK
SL
SM
SN
SO
SP
SQ
SR
SS
SU
SV
TVS
TRG1
TRG2
TRG3
TRG4
TRG5
TRG6
TRG7
TRG8
TRG9
TRG10
TRG11
TRG12
TRG13
TRG14
TRG15
TRG16
TRG17
TRG18
TRG19
TRG20
TRG21
TRG22
TRG23
TRG24
TRG25
TRG26
TRG27
TRG28
TRG29
TRG30
TRG31
TRG32
TRG33
TRG34
TRG35
TRG36
TRG37
TRG38
TRG39
TRG40

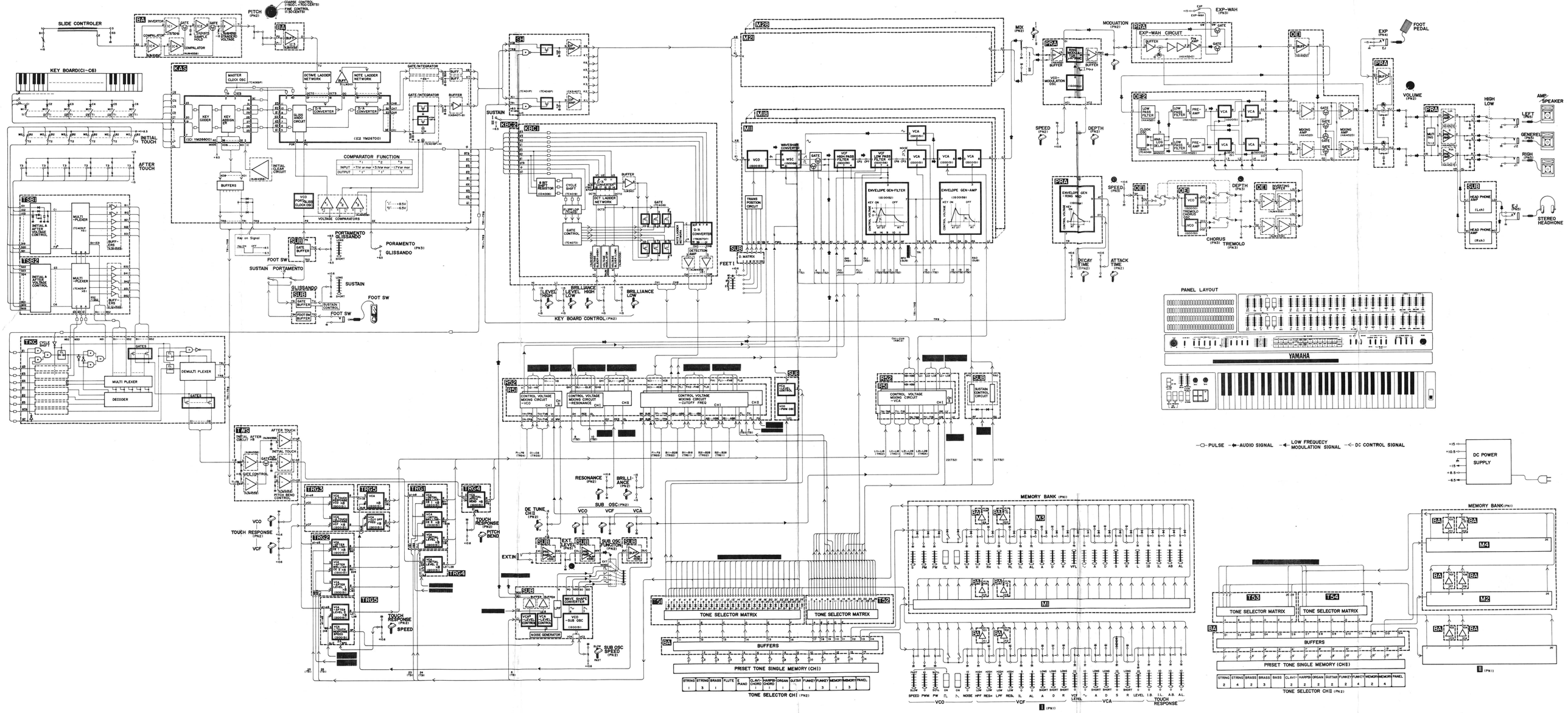
SLIDE CONTROLER
KEY BOARD(C1~C6)
PITCH (PN2)
COARSE CONTROL (PN3)~FINE CONTROL (PN3)
KAS
MASTER CLOCK OSC
OCTAVE LADDER NETWORK
NOTE LADDER NETWORK
GATE/INTEGRATOR
KEY CODER
KEY ASSIGN
GATE
D/A CONVERTER
GLIDE AMOUNT CIRCUIT
(IC1 YM2600)
(IC2 YM2700)
COMPARATOR FUNCTION
INPUT -7.7V or mor -3.5V or mor -1.7V or mor
OUTPUT "1" "1" "1"
INITIAL TOUCH
AFTER TOUCH
BUFFERS
INITIAL CLEAR CIRCUIT
VCO PORTAMENTO CLOCK OSC
VOLTAGE COMPARATORS
TS1
TS2
MULTI PLEXER
INITIAL & AFTER VOLTAGE CONTROL
Key on Signal
PORTAMENTO GLISSANDO
PORAMENTO (PN3)
GLISSANDO
FOOT SW
SUSTAIN PORTAMENTO
SUSTAIN
SUSTAIN CONTROL
TKS
CYCLE SHIFT
GATES
DEMULTI PLEXER
DECODER
TWS
AFTER TOUCH
INITIAL TOUCH
PITCH BEND CONTROL
TRG1
TRG2
TRG3
TRG4
TRG5
VCO
VCF
TOUCH RESPONSE (PN2)
SPEED
SH
SUSTAIN
KBC2
KBC1
8 BIT SHIFT REGISTER
CYCLE SHIFT
FILTER FLIP FLOP
GATE CONTROL
OCT LADDER NETWORK
NOTE LADDER NETWORK
D/A CONVERTER
DETECTION AMP
BUFFER
LEVEL HIGH
BRILLIANCE LEVEL HIGH LOW
BRILLIANCE LOW
KEY BOARD CONTROL (PN2)
M2
M1
VCO
WAVE/SHAPE CONVERTER
VCF HIGH PASS FILTER
VCF LOW PASS FILTER
VCA
ENVELOPE GEN-FILTER
ENVELOPE GEN-AMP
TRANS POSITION CIRCUIT
SUB
D. MATRIX
FEET
MIX (PN2)
PRA
RING MODULATOR
VCO-MODULATION OSC.
MODUATION (PN2)
SPEED (PN2)
DEPTH (PN2)
ENVELOPE GEN-RING MOD
DECAY TIME (PN2)
ATTACK TIME (PN2)
EXP-WAH (PN3)
EXP-WAH CIRCUIT
EXP (PN4)
FOOT PEDAL
OE1
OE2
LOW PASS FILTER
PRE-AMP
MIXING AMP
GATE
CLOCK GENERATOR
LOW FREQUENCY OSC
TREMOLO CHORUS OSC
CHORUS (PN3)
TREMOLO (PN3)
BUFFERING AMPLIFIER
VOLUME (PN2)
HIGH LOW
AMP-SPEAKER
LEFT (PN2)
GENERE (PN3)
RIGHT
SUB
HEAD PHONE AMP
EQ (PN3)
STEREO HEADHONE
PANEL LAYOUT
YAMAHA
PULSE
AUDIO SIGNAL
LOW FREQUECY MODULATION SIGNAL
DC CONTROL SIGNAL
DC POWER SUPPLY
RS2
RS1
CONTROL VOLTAGE MIXING CIRCUIT -VCO
CONTROL VOLTAGE MIXING CIRCUIT -RESONANCE
CONTROL VOLTAGE MIXING CIRCUIT -CUTOFF FREQ
CONTROL VOLTAGE MIXING CIRCUIT -VCA
SUSTAIN CONTROL CIRCUIT
RESONANCE (PN2)
BRILLIANCE (PN2)
SUB OSC (PN2)
DE TUNE CH II (PN2)
EXT. LEVEL (PN3)
SUB OSC FUNCTION (PN2)
EXT IN
PITCH BEND
TOUCH RESPONSE (PN2)
SUB OSC SPEED (PN2)
NOISE GENERATOR
WAVE SHAPE CONVERTER
VCO -SUB OSC
TS1
TS2
TONE SELECTOR MATRIX
BUFFERS
PRISET TONE SINGLE MEMORY (CH1)
STRING 1 | STRING 3 | BRASS 1 | FLUTE 1 | E PIANO 1 | CLAVI-CHORD 1 | HARPSI-CHORD 1 | ORGAN 1 | GUITAR 1 | FUNKY 2 | FUNKY 3 | MEMORY 1 | MEMORY 3 | PANEL
TONE SELECTOR CH I (PN2)
MEMORY BANK (PN1)
M3
M1
SPEED PWM PW FL FL NOISE HPF RESH LPF REN. IL AL A D R VCF LEVEL A D S R LEVEL I.B. I.L. A.B. A.L.
VCO
VCF
VCA
TOUCH RESPONSE
I (PN1)
TS3
TS4
TONE SELECTOR MATRIX
BUFFERS
PRISET TONE SINGLE MEMORY (CH II)
STRING 2 | STRING 4 | BRASS 2 | BRASS 3 | BASS | CLAVI-CHORD 2 | HARPSI-CHORD 2 | ORGAN 2 | GUITAR 2 | FUNKY 2 | FUNKY 4 | MEMORY 2 | MEMORY 4
TONE SELECTOR CH II (PN2)
MEMORY BANK (PN1)
M4
M2
II (PN1)

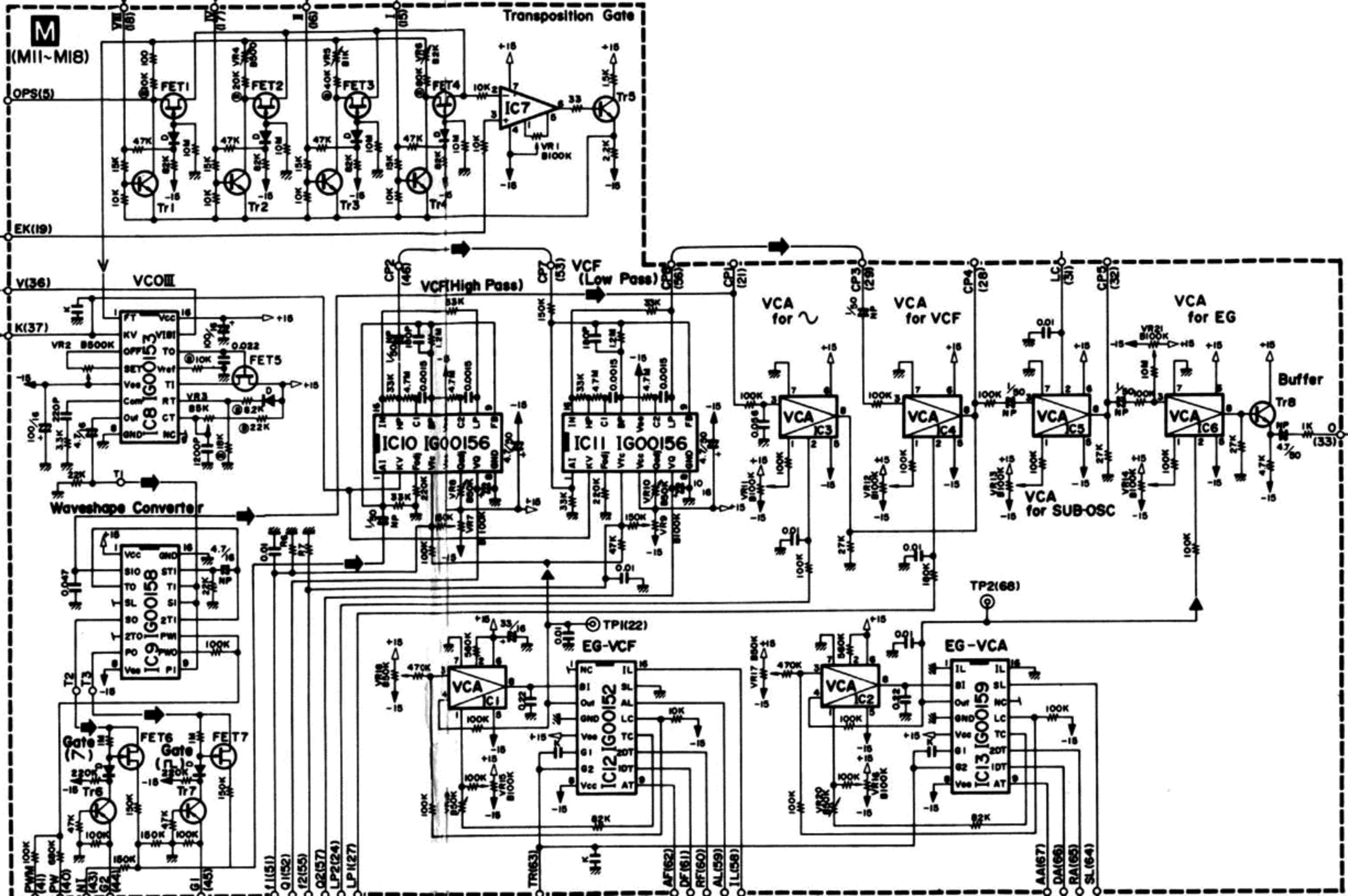
Transposition Gate
M
(MII~MI8)
OPS(5)
EK(19)
FET1
FET2
FET3
FET4
IC7
Tr5
Tr1
Tr2
Tr3
Tr4
VR1 B100K
V(36)
K(37)
VCOIII
IC8 IG00153
FET5
VR2 B500K
VR3 B5K
Waveshape Converter
IC9 IG00158
VCF (Low Pass)
VCF(High Pass)
IC10 IG00156
IC11 IG00156
VCA for ~
VCA for VCF
VCA for EG
VCA for SUB-OSC
VR21 B100K
Buffer
Tr8
TP2(68)
TP1(22)
EG-VCF
EG-VCA
IC12 IG00152
IC13 IG00159
Gate (7)
Gate (Π)
FET6
FET7
Tr6
Tr7

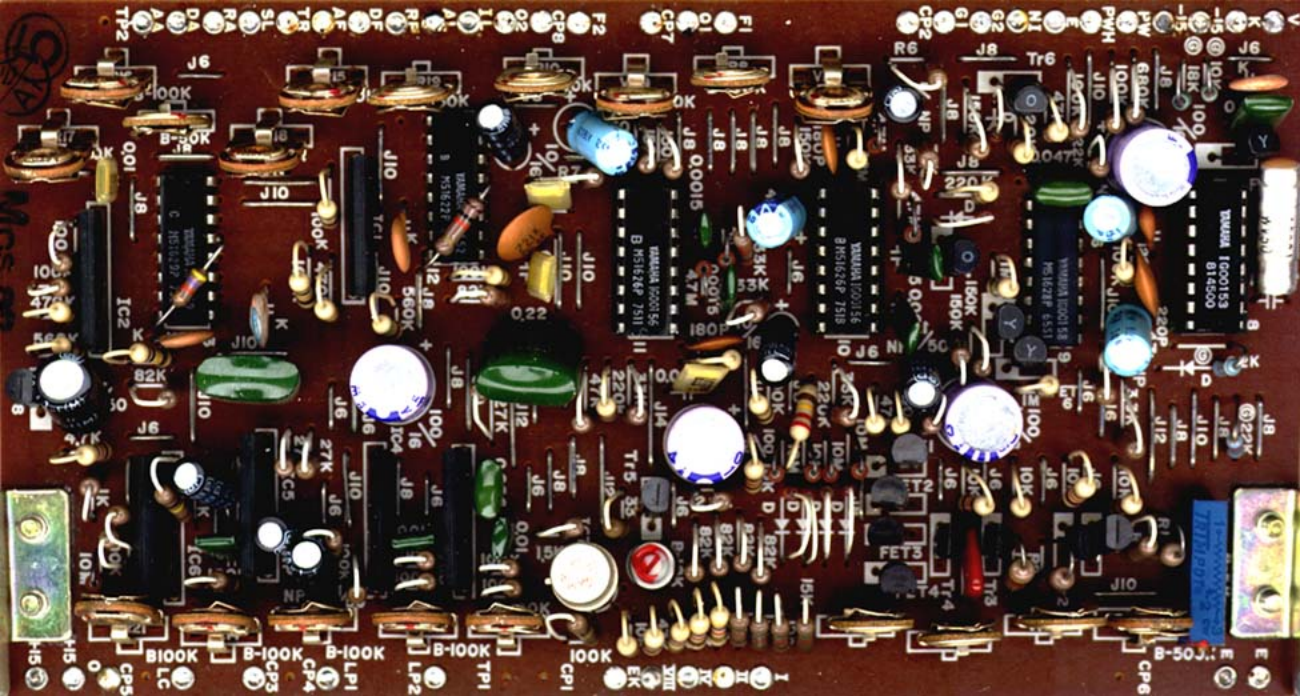
TP2
J6
100K
B-50K
J8
J10
J12
IC2
IC4
IC5
IC6
Tr5
Tr6
R6
FET3
FET4
B100K
B-100K
CP3
CP4
LP1
LP2
TP1
CP1
CP5
CP6
B-50J