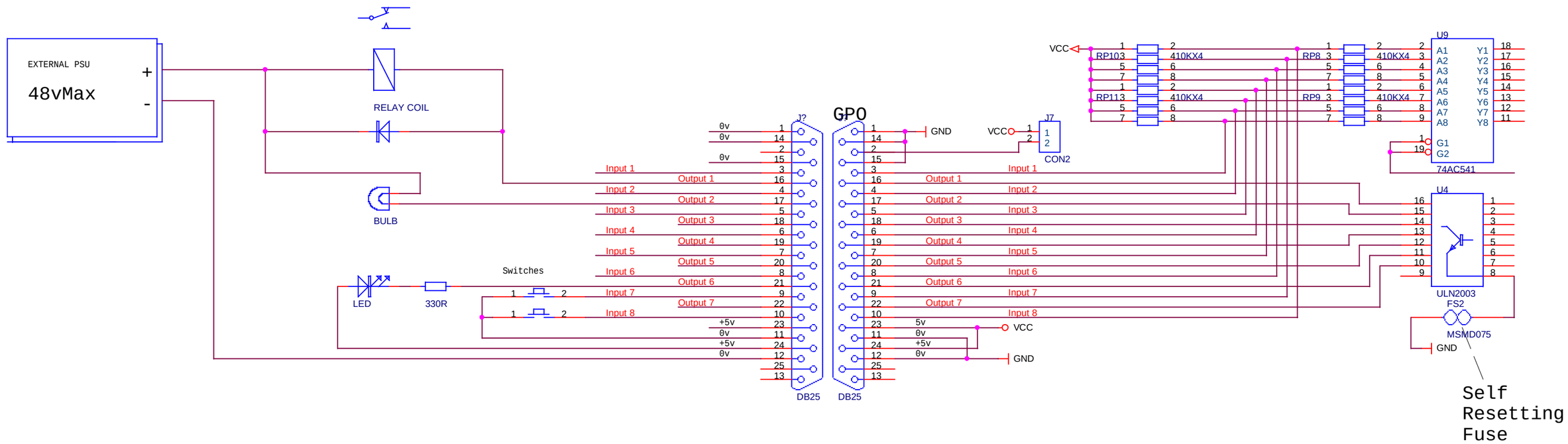
EXTERNAL PSU
48vMax
+
-
RELAY COIL
BULB
LED
330R
Switches
GPO
J2
J7
CON2
DB25
DB25
GND
VCC
0v
+5v
5v
Input 1
Input 2
Input 3
Input 4
Input 5
Input 6
Input 7
Input 8
Output 1
Output 2
Output 3
Output 4
Output 5
Output 6
Output 7
RP103
RP113
RP8
RP9
410KX4
U9
74AC541
U4
ULN2003
FS2
MSMD075
Self Resetting Fuse